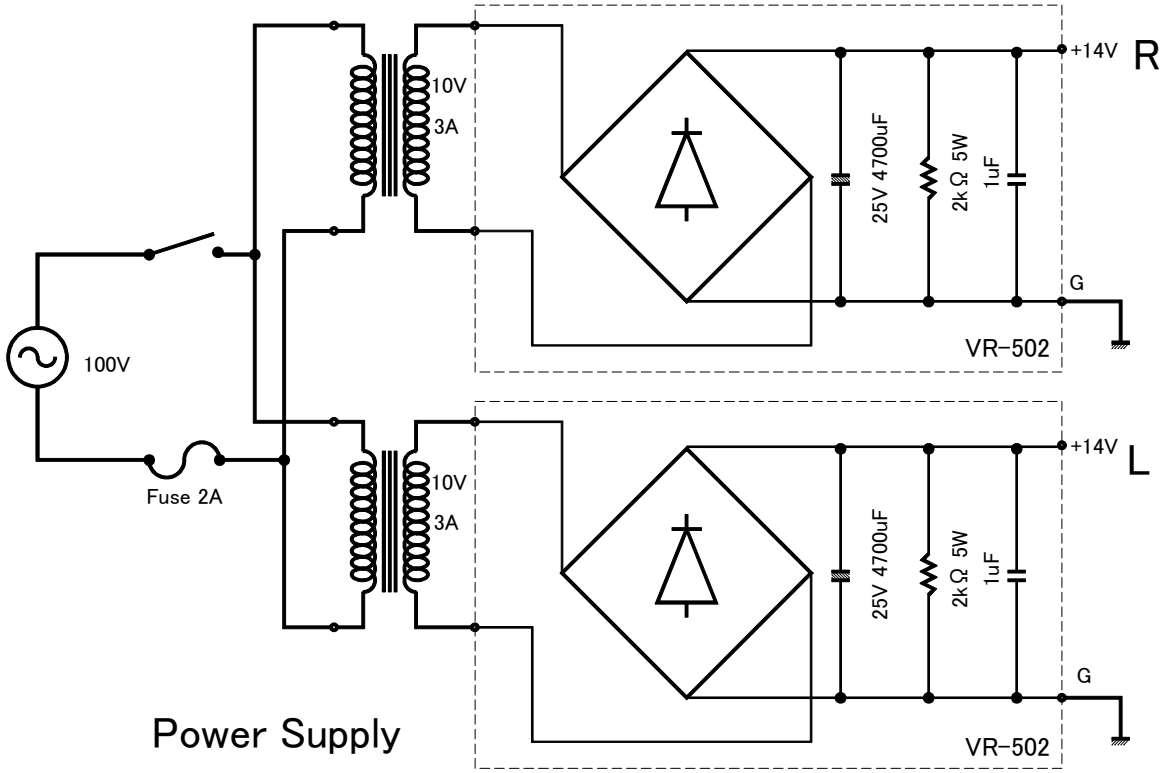
100V
Fuse 2A
10V
3A
25V 4700uF
2kΩ 5W
1uF
+14V
R
G
VR-502
L
Power Supply

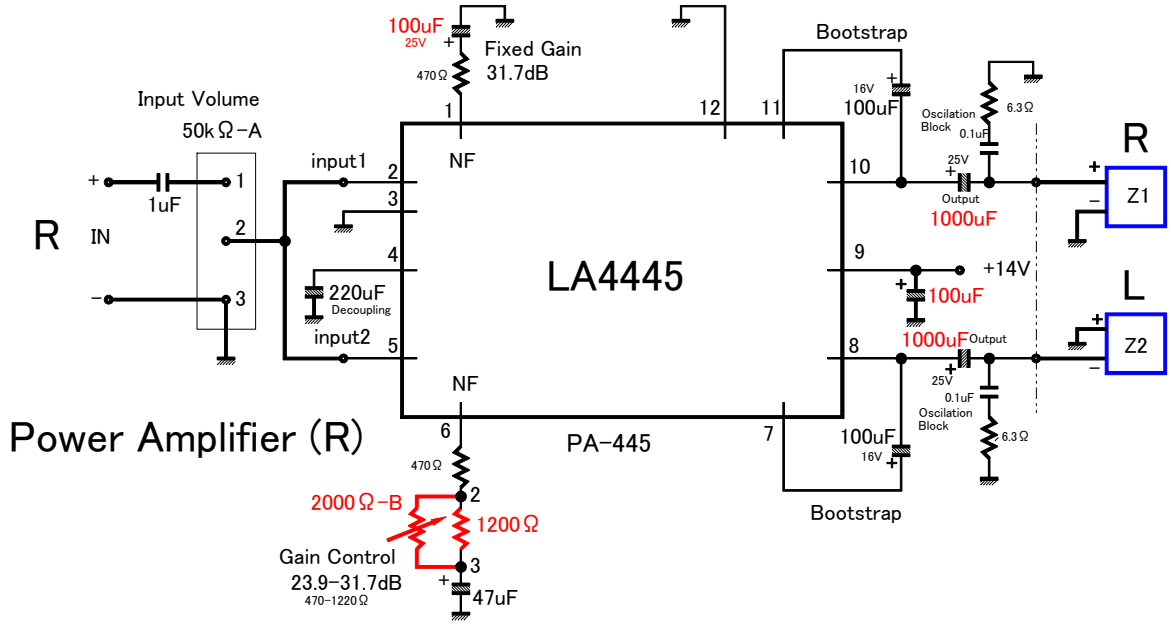
100uF
25V
470Ω
Fixed Gain
31.7dB
Input Volume
50kΩ-A
1uF
R IN
input1
input2
220uF
Decoupling
NF
LA4445
PA-445
Bootstrap
16V
100uF
Oscilation Block
0.1uF
6.3Ω
25V
Output
1000uF
+14V
R
L
Z1
Z2
2000Ω-B
1200Ω
Gain Control
23.9-31.7dB
470-1220Ω
47uF
Power Amplifier (R)

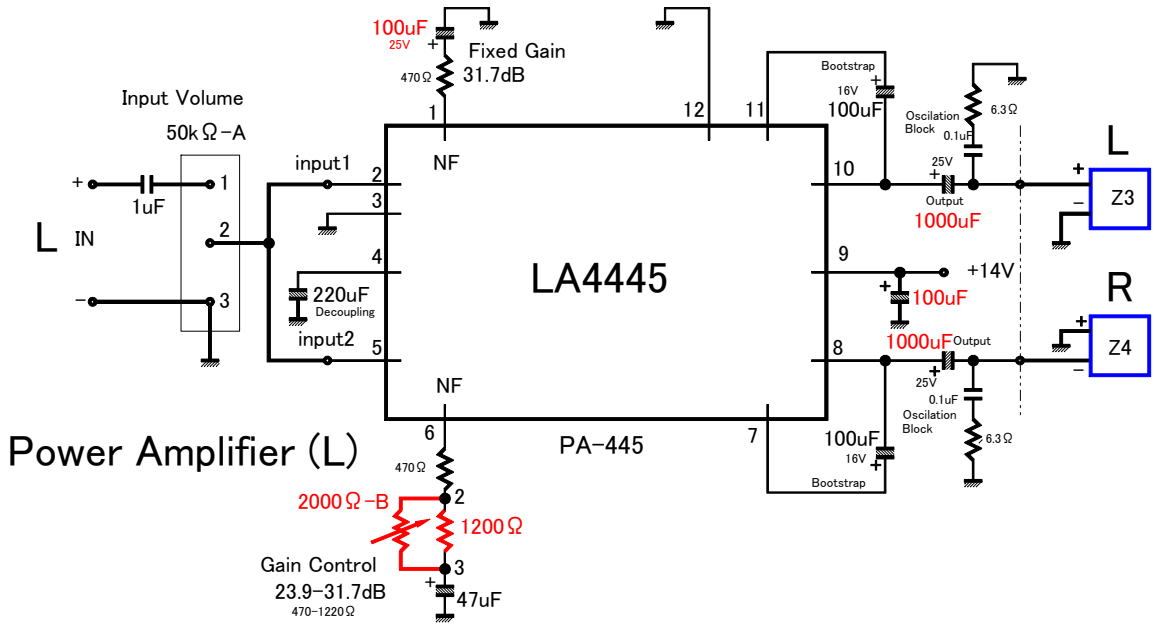
100uF
25V
470Ω
Fixed Gain
31.7dB
Input Volume
50kΩ-A
1uF
L IN
input1
input2
220uF
Decoupling
NF
LA4445
PA-445
Bootstrap
16V
100uF
Oscilation Block
0.1uF
6.3Ω
25V
Output
1000uF
+14V
L
R
Z3
Z4
2000Ω-B
1200Ω
Gain Control
23.9-31.7dB
470-1220Ω
47uF
Power Amplifier (L)